International Journal of Modelling and Simulation

ISSN: 0228-6203 (Print) 1925-7082 (Online) Journal homepage: https://www.tandfonline.com/loi/tjms20

Bond graph modeling of soft switching concept and its parameters optimization

Anil C. Mahato, Sanjoy K. Ghoshal & Arun K. Samantaray

To cite this article: Anil C. Mahato, Sanjoy K. Ghoshal & Arun K. Samantaray (2019) Bond graph modeling of soft switching concept and its parameters optimization, International Journal of Modelling and Simulation, 39:4, 223-233, DOI: 10.1080/02286203.2018.1490142

To link to this article: https://doi.org/10.1080/02286203.2018.1490142

Published online: 12 Jul 2018.

Submit your article to this journal

Article views: 130

View related articles

View Crossmark data

Citing articles: 5 View citing articles

Full Terms & Conditions of access and use can be found at
https://www.tandfonline.com/action/journalInformation?journalCode=tjms20

INTERNATIONAL JOURNAL OF MODELLING AND SIMULATION
2019, VOL. 39, NO. 4, 223–233
https://doi.org/10.1080/02286203.2018.1490142

Taylor & Francis
Taylor & Francis Group

ARTICLE

Bond graph modeling of soft switching concept and its parameters optimization

Anil C. Mahato[a], Sanjoy K. Ghoshal[a] and Arun K. Samantaray[b]

[a]Department of Mechanical Engineering, Indian Institute of Technology (Indian School of Mines), Dhanbad, India; [b]Department of Mechanical Engineering, Indian Institute of Technology, Kharagpur, India

ABSTRACT
The function of a soft switch is to provide a temporarily flow path of high pressure throttle fluid and store it temporally in a small chamber during valve transition, thus leading to passive vibration isolation. In this article, three different on/off controlled hydraulic systems without and with soft switch have been modeled using bond graph technique and simulated to analyze the performance of the soft switch. Some key parameters of the soft switch are identified and their values are optimized through multiple-run simulation. Thereafter, a relationship has been derived between the soft switch parameters and the overall energy loss of the system using regression analysis. It has been observed that the total energy loss in the system with soft switch is about one-third of that when the system is operated with relief valve only.

ARTICLE HISTORY
Received 24 April 2018
Accepted 14 June 2018

KEYWORDS
Fluid power system; soft switch; bond graphs; energy loss; optimization

1. Introduction

There has been an increasing use of the on/off controlled valves to obtain variable flow using low-cost fixed displacement pump. However, a significant amount of energy is lost during throttling when the switching frequency for valve transitions between two states (on and off) is not negligible. Present research is focused on reducing the throttling energy losses in solenoid valves which are actuated by digital signals. A detail study of a high speed on/off valve was reported by Katz in [1], where the loss coefficients were optimized to yield the most competent design. By means of these optimum values, a prototype valve was produced and validated experimentally. In [2], Zhu et al. proposed the high speed on/off valve control propeller of remotely operated underwater vehicles. The proposed control method established that the high speed on/off valve had a better frequency response performance than the traditional pulse width modulated (PWM) controlled method. In [3], Wang et al. studied an incessantly variable hydraulic pressure converter based on high-speed on/off valves. A model of unidirectional PWM controlled rotary on/off valve was developed by Tu et al. [4] to analyze the performance and it was validated experimentally from a proof-of-concept prototype. In [5], authors had suggested an on/off control strategy to get the variable flow from a fixed displacement pump and later it was modified by Li et al. [6]. The system output was controlled by PWM. The energy loss of the hydraulic system is highly related with the valve transition time [7,8] and it is called throttling energy loss. To reduce the throttling loss, a soft switching concept was proposed by Rannow and Li [9]. That concept is identical to a procedure in electronic switch mode converters, which ominously diminishes the energy loss during valve shifting by providing an alternative path for the fluid. Authors had compared the performance of an on-off controlled system without and with soft switch.

However, all the above studies are based on analytical approach with some simplified assumptions, which are not easy to execute in practical cases. These are based on reduced order equations of motion and linear control theory. The transfer function technique is an important tool to analyze hydraulic systems. However, it has limitation in the application over the nonlinear systems that frequently appear in the equations related to fluid flow, which must be linearized about an operating point. Consequently, the bond graph modeling technique [10–15] is used here, which allows model simulation of complex systems having nonlinearity and interaction with multiple energy domains. Also, it assures energetic consistency in the model structure which is relevant here because this study is associated with improvement of energy efficiency. In [16], authors had given a novel approach

CONTACT Sanjoy K. Ghoshal sanjoykghoshal@iitism.ac.in Department of Mechanical Engineering, Indian Institute of Technology (Indian School of Mines), Dhanbad 826004 India

© 2018 Informa UK Limited, trading as Taylor & Francis Group

to derive the finite element mass and stiffness matrices from energy equations of bond graphic multiport I and C elements for dynamical modeling of a rotating shaft subject to bending. Again, the bond graph technique was applied to study the multibody dynamics of healthy and faulty rolling element bearings, and experiments were conducted to validate the simulation results [17]. To obtain faster simulation, different model order reduction techniques were devised in the recent past [18–20] whereby the computation complexity was reduced.

The objective of this article was to develop a bond graph model of a soft switching of an on/off controlled hydraulic system. The proposed model is validated by comparing its simulation results with that of Rannow and Li [9]. The model considered the contact dynamics of the valve and the dynamics of the locking mechanism, which were ignored in the earlier study [9]. Optimization of soft switch parameters is carried out through multiple-run simulation. Thereafter, an interrelationship between key parameters and overall energy loss has been established through regression analysis. The performance of the system in the context of energy loss has also been studied by varying the contact stiffness of the spring of the soft switch piston.

2. Operation of the soft switch

Figure 1 shows a hydraulic system, where a variable flow from a fixed displacement pump is obtained by the use of PWM on/off valve. Incorporating the soft switching, the proposed system is shown in Figure 2, where the three-way on/off valve in Figure 1 is replaced by two numbers of two-way valves (item no. 1 and 2).

The output of the systems, i.e. Figures 1 and 2, is controlled by using PWM controlled valves. The sequences of operation of the valves are as follows (refer Figure 3): after a particular duration of opening (t_{Lvfo}), the load valve will close during the time interval

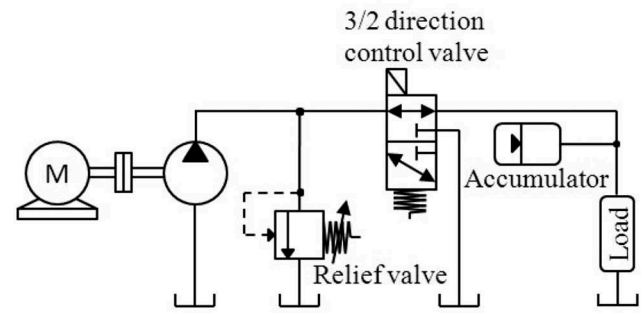

Figure 1. Virtual variable flow from a fixed displacement pump.

t_1, followed by the tank valve opening during the time interval t_2. After some dwell time (t_{tvfo}), the tank valve will close during the time interval t_3, followed by the opening of the load valve during the time interval t_4. The transient pressure spikes of the load valve during the transition period t_1 and t_4 are eliminated by incorporating a check valve in parallel with the load valve in Figure 2 instead of the relief valve as shown in Figure 1. However, there may be significant energy loss during remaining two transitions (i.e. t_2 and t_3).

The soft switch shown in Figure 2 consists of a small oil chamber with a piston and a pre-compressed spring and an externally actuated locking mechanism. The piston is held near the middle of the chamber by a locking mechanism. In the event of opening the tank valve, the lock is released and the high pressure fluid fills the chamber. Instead of fluid being forced to flow through the tank valve, the fluid gets accumulated in the chamber of the soft switch. Once the tank valve is completely open, the spring will force the piston to move up to the top of the chamber forcing the fluid from the chamber to the tank. Then, once the tank valve begins to close and the pressure rises above the spring pressure, the fluid will once again flow into the chamber of the soft switch. During the movement of the piston, once it hits the locking mechanism, the tank valve should be almost closed, and the pressure will rise

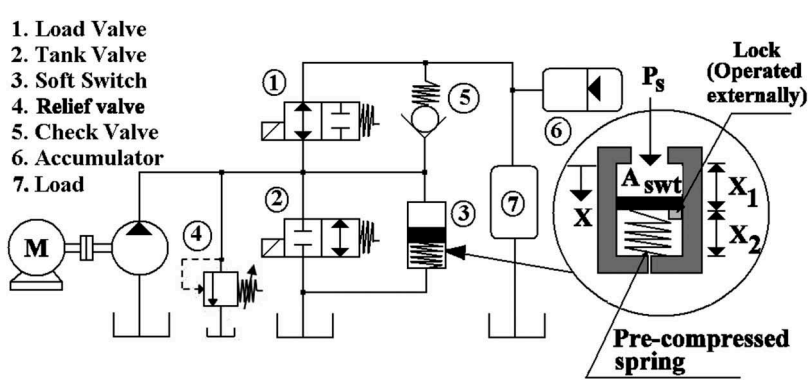

Figure 2. Hydraulic system with soft switch.

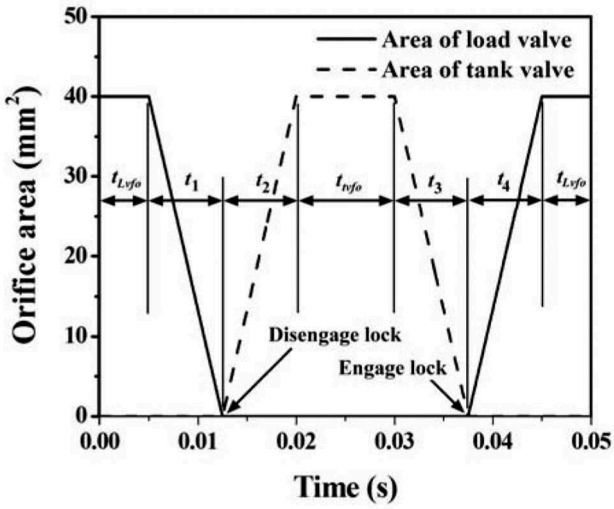

Figure 3. Area profile for one PWM period.

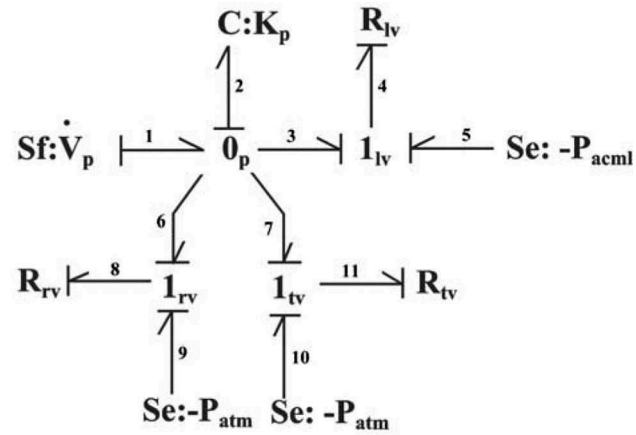

Figure 4. Bond graph model of the system with relief valve only.

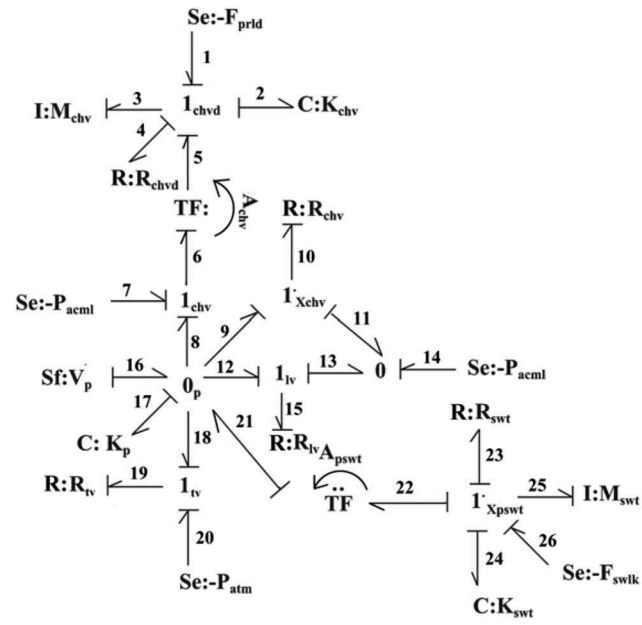

Figure 5. Bond graph model of the system with soft switch.

immediately that opens the check valve. Finally, once the load valve is fully open, the check valve will close and the fluid will flow through the fully opened load valve.

3. Modeling of the system

In this article, the model of the system has been developed using bond graph technique [10], which is mainly used to formulate the state equations of the system and its components as it is based on power flow representation of the system.

The following assumptions are made for the development of the model:

(i) The inertia of the flowing fluid is negligible.
(ii) The fluid is considered as Newtonian fluid.
(iii) The fluid properties are unaltered by the effect of pressures and temperatures.
(iv) The dynamics of the control valves, pump and the accumulator are not considered.

Referring to the systems given in Figures 1 and 2, the bond graph models for the same are shown in Figures 4 and 5, respectively.

In Figure 4, a constant flow ($\dot{V}_p$= 38 lpm) supplied to the pump is represented by *Sf* element at 0_p junction. The fluid bulk stiffness (K_p) is indicated by *C* element on the same junction. The *R* elements appended to 1_{rv}, 1_{tv} and 1_{lv} junctions represent the resistances of the valve ports. The flow through the valves follows square root law [11,12], i.e. depends on the port opening area of the valves and the pressure difference across them (ΔP).

The bond graph model of the system with soft switch (refer Figure 2) is shown in Figure 5. The flow rate supplied by the pump is $\dot{V}_p$, same as indicated in Figure 4. The *I, R* and *C* elements are connected with the 1_{chvd} junction which constitute the check valve dynamics and these represent the mass inertia, viscous friction coefficient and spring stiffness of the valve, respectively. The source of effort (*Se*) element on the identical junction indicates the valve preload (F_{prld}). During the opening of the check valve, the flow rate ($\dot{V}_{chv}$) through it depends on the pressure difference across it (P_p – P_{acml}), and the position of the check valve (x_{chv}). Again, at the junction$1_{\dot{x}pswt}$, the elements *I, C* and *R* correspond to the piston mass,

viscous friction resistance and the spring stiffness of the soft switch, respectively. The *Se* element connected with the same junction represents the force required (F_{swlk}) for releasing and closing the lock of the soft switch.

The volume flow rate supplied through the load valve ($\dot{V}_{lv}$) can be derived from Figure 4 by considering the flow continuity at the pump plenum (0_p junction),

$$\dot{V}_{pc} = \dot{V}_p - \dot{V}_{lv} - \dot{V}_{tv} - \dot{V}_{rv}, \tag{1}$$

where $\dot{V}_p$ is the flow rate through pump; V_{pc} is the flow loss due to the compressibility of the flowing fluid at the pump plenum. The flow through the load valve ($\dot{V}_{lv}$), tank valve ($\dot{V}_{tv}$) and the relief valve ($\dot{V}_{rv}$) follow square root law and are given in Equations (2), (3) and (4):

$$\dot{V}_{lv} = c_d\, a_{lv}(t) \sqrt{\frac{2\,|P_p - P_{acml}|}{\rho}}\, sign\,(P_p - P_{acml}) \tag{2}$$

$$\dot{V}_{tv} = c_d\, a_{tv}(t) \sqrt{\frac{2\,|P_p - P_{atm}|}{\rho}}\, sign\,(P_p - P_{atm}) \tag{3}$$

$$\dot{V}_{rv} = c_d a_{rv}(t)\sqrt{\frac{2|P_p - P_{atm}|}{\rho}} sign(P_p - P_{atm}) \quad if\left(P_p - P_{atm}\right) \geq P_{set} \tag{4}$$

where c_d is the orifice coefficient; $a_{tv}(t)$, $a_{lv}(t)$ and $a_{rv}(t)$ are the open areas for the tank valve, load valve and the relief valve, respectively; and ρ (= 850 kg/m^3) is the mass density of the flowing fluid; P_{set} is the preset pressure of the relief valve. The fluid pressure (P_p) at the pump plenum is given by:

$$P_p = K_p V_{pc} \tag{5}$$

The system equations are derived from the bond graph model (refer Figure 5) are as follows [11–14]:

$$\dot{V}_{pc} = \dot{V}_p - \dot{V}_{lv} - \dot{V}_{tv} - \dot{V}_{chv} - A_{pswt}\,\dot{x}_{pswt} - A_{chv}\,\dot{x}_{chv} \tag{6}$$

where $\dot{V}_{chv}$ is the check valve flow, A_{pswt} and A_{chv} are the area of the piston of the soft switch and the check valve poppet, respectively; and, x_{pswt} and x_{chv} indicate their corresponding displacements.

The rates of flow through the check valve is expressed as:

$$\dot{V}_{chv} = c_d\, a_{chv}(t) \sqrt{\frac{2\,|P_p - P_{acml}|}{\rho}}\, sign(P_p - P_{acml}). \tag{7}$$

where P_{acml} is the accumulator pressure. The open area of the check valve ($a_{chv}(t)$) is expressed as:

$$a_{chv}(t) = \pi d_{chv} x_{chv}(t), \tag{8}$$

In Equation (8), $x_{chv}(t)$ and d_{chv} are the displacement and the diameter of the check valve poppet, respectively. The inertia force on the check valve is expressed by the Equation (9) using equilibrium mechanical force balancing at 1_{chv} junction:

$$\dot{p}_{chv} = A_{chv}\,(P_p - A_{acml}) - R_{chv}\,\dot{x}_{chv} - F_{prld} - K_{chv}\,x_{chv}, \tag{9}$$

where the area of the check valve is expressed as $A_{chv} = \pi {d_{chv}}^2/4$.

In Equation (9), the second term is the force acted upon the check valve caused by the differential pressure acting on it, the third term is the viscous friction force, the fourth term is the spring preload, and the fifth term is the force due to the compression of the spring.

Similarly, the inertia force on the piston of the soft switch is given by

$$\dot{p}_{pswt} = P_p A_{pswt} - R_{pswt}\dot{x}_{pswt} - K_{pswt}x_{pswt} - F_{swlk} \tag{10}$$

where K_{pswt} and R_{pswt} are the stiffness and the damping coefficient, respectively; F_{swlk} is the locking force associated with releasing and closing the lock of the soft switch, which is expressed as:

$$\begin{aligned} F_{swlk} &= -prld_{swt} - \left(K_{high}\left(x_{pswt} - x_0\right) + R_{high}\dot{x}_{pswt}\right) \quad if(t \leq 0.0125 \quad t \geq 0.0375) \\ &= -prld_{swt} \quad if(0.0125 < t < 0.0375) \end{aligned} \tag{11}$$

The K_{high} and R_{high} are the high values of the stiffness and the resistance, respectively, which are effective during the PWM period except from 0.0125 s to 0.0375 s (refer Figure 3), and $prld_{swt}$ is the preload force of the piston spring.

4. Results and discussion

4.1 *Multiple-run simulation for optimization of soft switch parameter values*

The system equations derived from the bond graph model (given in Section 3) are solved numerically using the software Symbols-Shakti [21]. The used parameter values for solving the equations are given in Table 1.

Optimization designates to enhancing the performance of the system to derive the most effective outcome from it. Different optimization techniques [22,23] were used in the recent past by many researchers. In this article, an optimization technique using

Table 1. Used parameter values in model simulation.

Parameter	Value	Parameter	Value
Accumulator pressure, P_{acml}	69 bar	Soft switch chamber length, X_2	12×10^{-3} m
Spring preload to check valve, F_{prld}	30 N	Area of the piston of soft switch A_{pswt}	132×10^{-6} m^2
Bulk stiffness of the fluid at the pump plenum, K_p	1×10^{14} N/m	Pre-compressive force of soft switch spring, $prld_{swt}$	83.61 N
Check valve spring stiffness, K_{chv}	2×10^3 N/m	Soft switch spring stiffness, K_{swt}	1448.76 N/m
Damping of check valve, R_{chvd}	15 Ns/m	Mass of soft switch piston, M_{swt}	2.6×10^{-3} kg
Mass of check ball, M_{chv}	1.9×10^{-3} kg	Damping coefficient of the soft switch, R_{swt}	8 Ns/m
Diameter of the check ball, d_{chv}	11×10^{-3} m	Lock stiffness, K_{high}	1×10^6 N/m
Soft switch chamber length, X_1	6×10^{-3} m	Lock damping, R_{high}	1×10^4N-s/m

multiple-run simulation [18] is applied on some key soft switch parameters (i.e. $prld_{swt}$ and K_{swt}) whose numerical values affect the system performance significantly. Multiple-run simulations technique is helpful when multiple simulations are to be carried out using varying parameter values or initial conditions. The output obtained thereof may be subjected to comparative study or optimization. The number of simulations to be run can be chosen as input, while the identified parameters along with suitable range of values are inserted. Also, a suitable method (i.e. data mode or interpolation mode) has to be selected to vary the value of each parameter within a range. In data mode, the intermediate simulation passes must be mentioned, whereas in interpolation mode, the suitable method, i.e. linear map or logaritmic map is to be chosen for interpolation. The data obtained using multiple-run simulations are given in Table 2, where two different simulations data are displayed. In the first simulation, the soft switch parameters, $prld_{swt}$ and K_{swt}, are varied in the range 50–600 N and 1×10^3–6×10^3 N/m, respectively. The corresponding minimum energy loss (11.28 J) is presented by Sl. No. 7, first sub-Table 2 in bold font, whereas in another multiple-run simulation, K_{swt} is reduced from 6×10^3 N/m to 1×10^3 N/m keeping the variation pattern of $prld_{swt}$ unaltered. Referring to the bond graph models, i.e. Figures 4 and 5, the total power losses of the system are expressed in Equations (12) and (13), respectively:

$$P_{loss} = e_4 f_4 + e_8 f_8 + e_{11} f_{11} \tag{12}$$

$$P_{loss} = e_4 f_4 + e_{10} f_{10} + e_{15} f_{15} + e_{19} f_{19} + e_{23} f_{23} \tag{13}$$

Table 2. Multiple-run simulations data.

$prld_{swt}$ is varied 50–600 N and K_{swt} is varied 1×10^3–6×10^3 N/m.				$prld_{swt}$ is varied 50–600 N and K_{swt} is varied 6×10^3–1×10^3 N/m.		
Sl No.	$prld_{swt}$	K_{swt}	*Energy loss* (E_{loss})	$prld_{swt}$	K_{swt}	*Energy loss* (E_{loss})
1	50	1000	13.315	50	6000	13.4101
2	54.4732	1063.73	12.6903	54.4732	5640.51	12.989
3	59.3467	1131.53	12.1917	59.3467	5302.56	12.6206
4	64.6561	1203.64	11.8086	64.6561	4984.86	12.3111
5	70.4405	1280.36	11.533	70.4405	4686.19	12.0668
6	76.7425	1361.96	11.3581	76.7425	4405.42	11.8911
7	**83.6082**	**1448.76**	**11.2791**	83.6082	4141.47	11.7875
8	91.0882	1541.1	11.2901	**91.0882**	**3893.33**	**11.7578**
9	99.2374	1639.32	11.3867	99.2374	3660.07	11.8012
10	108.116	1743.79	11.5656	108.116	3440.77	11.9164
11	117.788	1854.93	11.8169	117.788	3234.62	12.1013
12	128.326	1973.15	12.1764	128.326	3040.82	12.3964
13	139.807	2098.91	12.5745	139.807	2858.63	12.7256
14	152.314	2232.68	12.9986	152.314	2687.35	13.0858
15	165.941	2374.98	13.4488	165.941	2526.34	13.4767
16	180.787	2526.34	13.9255	180.787	2374.98	13.8982
17	196.961	2687.35	14.4268	196.961	2232.68	14.3497
18	214.582	2858.63	14.9547	214.582	2098.91	14.8315
19	233.78	3040.82	15.5093	233.78	1973.15	15.3437
20	254.695	3234.62	16.0913	254.695	1854.93	15.8868
21	277.481	3440.77	16.7015	277.481	1743.79	16.4616
22	302.306	3660.07	17.3412	302.306	1639.32	17.0686
23	329.351	3893.33	18.0133	329.351	1541.1	17.7098
24	358.816	4141.47	18.7177	358.816	1448.76	18.3865
25	390.918	4405.42	19.4552	390.918	1361.96	19.0991
26	425.891	4686.19	20.2263	425.891	1280.36	19.8479
27	463.993	4984.86	21.0306	463.993	1203.64	20.6334
28	505.504	5302.56	21.8688	505.504	1131.53	21.4545
29	550.729	5640.51	22.7411	550.729	1063.73	22.3154
30	600	6000	23.6389	600	1000	23.2077

The total energy loss of the system is expressed as the time integral of total power loss, i.e. $\int P_{loss} dt$.

The corresponding minimum energy loss (11.76 J) obtained from bond graph simulation (refer Figure 5) is shown in Sl. No. 8, secondsub-Table 2 in bold font. Therefore, the minimum energy loss is obtained in the first sub-Table 2, which is 11.28 J. The corresponding parameters ($prld_{swt}$ = 83.61 N and K_{swt} = 1448.76 N/m) are assigned in model simulation. Thereafter, a mathematical relationship has been established among the identified soft switch parameters and the total energy loss by using regression analysis, as detailed in the next subsection.

The parameter value of $prld_{swt}$ is varied from 50 to 600 N during multiple-run simulation. If much lower value is considered, the spring displacement of the soft switch is much sensitive; as a result, the locking time is advanced, whereas much higher value results less displacement of the piston and reduces the fluid storing capacity of the soft switch which brings more energy loss (refer Figure 6). Similar situation is met when soft switch spring stiffness (K_{swt}) is varied less than 1×10^3 N/m or higher than 6×10^3 N/m.

4.2. Regression analysis

Regression analysis is one popular statistical analysis tool, used to establish a relationship among one or more independent variables and the dependent variable of a system. If more than one independent variable and one dependent variable exist into the task, it is called multiple regression analysis. Generally, an ordinary least square method is used to derive the equation by minimizing the sum of the squared residuals (the distances between the sample's data points and the forecast values of the equation) in the known data set. In this study, a multiple regression analysis has been carried out among the two independent parameters ($prld_{swt}$ and K_{swt}) and one dependent parameter (E_{loss}). The general expression to estimate the energy loss (E_{loss}) using multiple regression model along with known identified soft switch parameters (i.e. $prld_{swt}$ and K_{swt}) is given in Equation (14):

$$E_{loss} = b_0 + b_1 \times prld_{swt} + b_2 \times K_{swt} \tag{14}$$

where b_i (i = 0…2) are constant coefficients. From Equation (14), b_0 indicates the intercept point, whereas b_1 and b_2 are the slopes. The numerical values of the constant coefficients (b_0, b_1 and b_2) are obtained from 'Origin' software, which uses the least square minimization method to obtain a best fit:

$$E_{loss} = 11.07 + 3.8 \times 10^{-2} prld_{swt} - 1.57 \times 10^{-3} K_{swt} \tag{15}$$

The estimated value of R^2 is 0.97, which is close to unity. Therefore, it can be concluded that the regression model is acceptable from the precision perspective.

4.3. Comparison of three systems: with pressure relief valve (PRV), with check valve and PRV, and with soft switch and check valve

The simulation results of the performance of the systems with and without soft switch are obtained by considering the PWM controlled valve port area (refer Figure 3).

During opening and closing of the valve ports, significant pressure changes occur. The inlet pressure profiles of three systems, i.e. (1) system with pressure relief valve (PRV) only, (2) system with check valve and PRV and (3) system with soft switch and check valve are compared in Figure 6 for an identical PWM period. During simulating the system without check valve and the soft switch, the relief valve pressure is considered to be 77 bar.

In Figure 7(a), the system with relief valve only, it is observed that there are significant pressure spikes between time t_1 and t_2 and again between t_3 and t_4 when both tank and the load valves are closed. The

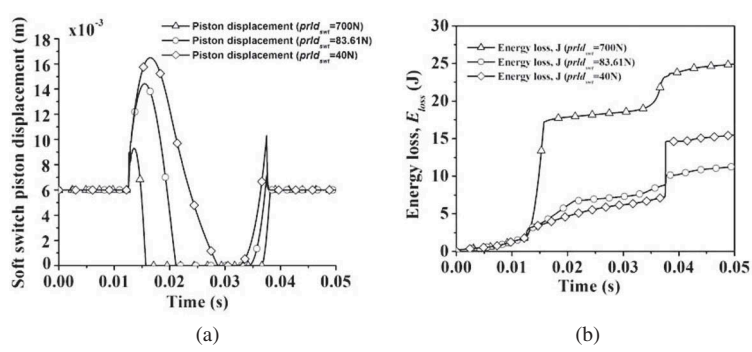

Figure 6. (a) Displacement of the soft switch piston with different $prld_{swt}$ (b) Energy loss with different $prld_{swt}$.

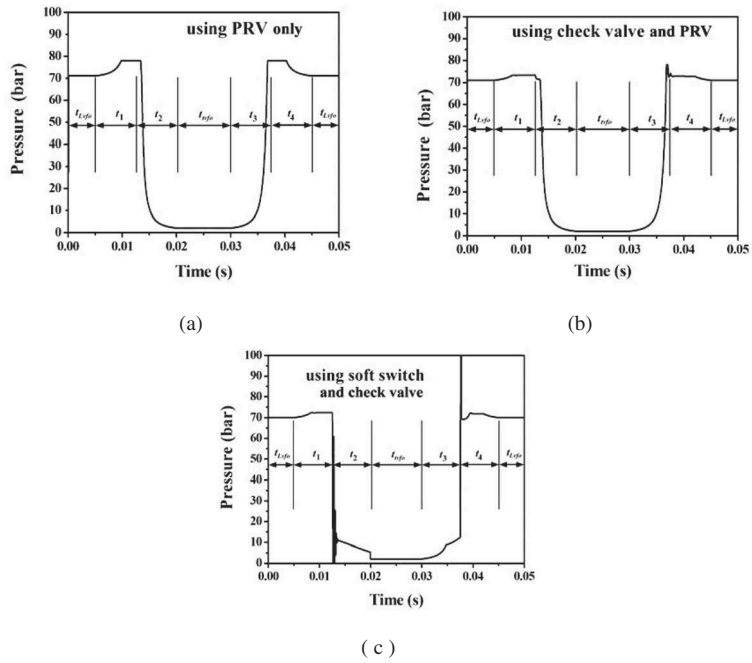

Figure 7. Inlet pressure response of three different systems.

preset pressure of the relief valve limits the pressure rise to 77 bar. The addition of the check valve (Figure 7(b)) or soft switch (Figure 7(c)) reduces the pressure rise and the corresponding energy losses. The pressure during the valve transition, i.e. (between t_1–t_2 and t_3–t_4) is higher in case without soft switching. This is caused by the release of pressure from the soft switch chamber which helps to maintain the higher pressure resulting from the spring force.

Figure 8 compares the simulation results of the pressure response of the system using soft switch with that of the results obtained by Rannow and Li [9]. The responses of the two results drawn in common scale are very similar. The minor differences are due to the assumption made for the constant value of bulk modulus of the flowing fluid. In [9], the value of the bulk modulus of the flowing fluid is considered to be pressure-dependent as obtained by Yu et al. [24] with the dissolution of air at high pressure neglected.

Referring to Figure 2, the flow through three different valves, namely, load valve, tank valve and the check valve, are presented in Figure 9. It is shown that the flow through the three valves (the

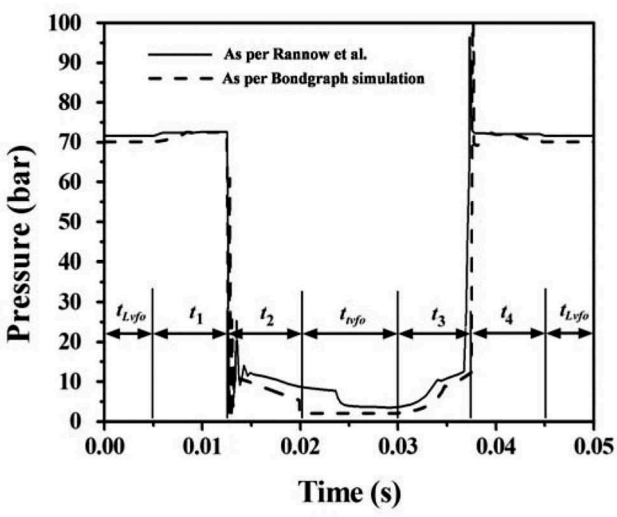

Figure 8. Comparison of inlet pressure of the systems with [9].

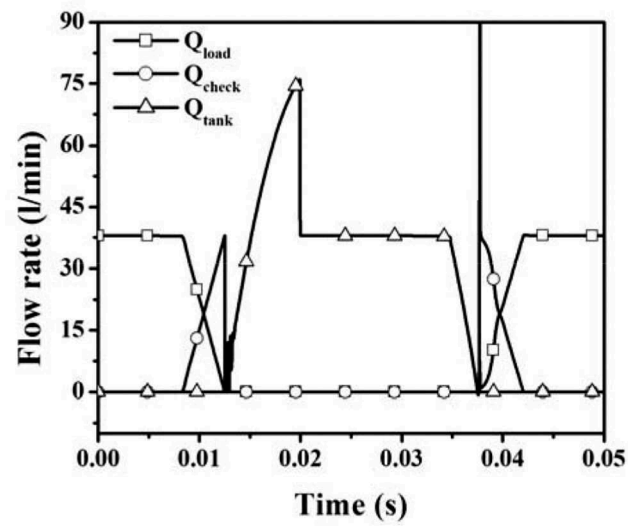

Figure 9. The flow rate through the valves of the soft switch.

load, tank and the check valves) is less as comparison to supply flow rate of the pump (≈ 38 lpm) during the time period 0.0125 –0.0154 s, whereas from 0.0154–0.0199 s, the valves flow are higher than that of the supply flow rate of the pump. Therefore, the main function of the soft switch is to store the fluid in its small chamber during the valve is in transition period and then release the same once the valve is fully open.

Figure 10 shows the power losses of the three systems over one PWM period. In bond graph technique, the power loss is simply the sum of the power in the bonds connected to the R elements and they are computed as the product of respective flow and effort variables of the bonds. The power loss gets a large spike during the transition period of the valve. The addition of the check valve considerably decreases the power loss due to throttling. In Figure 10(b), the two large loss spikes that occur during time t_1 and t_4 have been reduced to about half as the check valve eliminates losses in two of the four transition events. However, a significant amount of power loss still exists as a result of the two remaining transitions (t_2 and t_3). The incorporation of the soft switch that is used as temporary storage mechanism almost eliminates these transition losses (Figure 10(c)).

Figure 11 compares the overall energy losses of the three systems over one PWM period, which are the integrations of the power losses due to opening and closing of all the valve ports in the three systems, as shown in Figure 10.

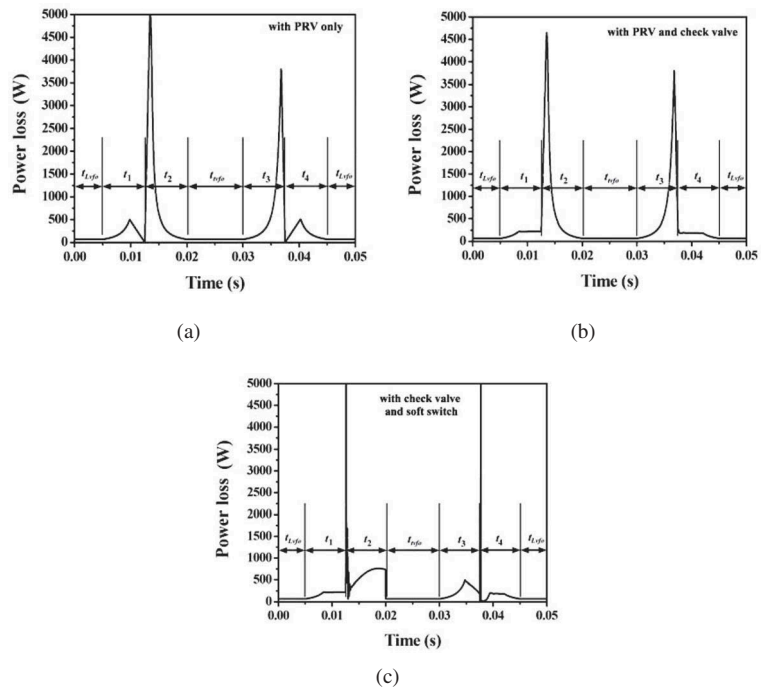

Figure 10. Power loss in three systems: (a) with PRV, (b) with PRV and check valve, (c) with check valve and soft switch.

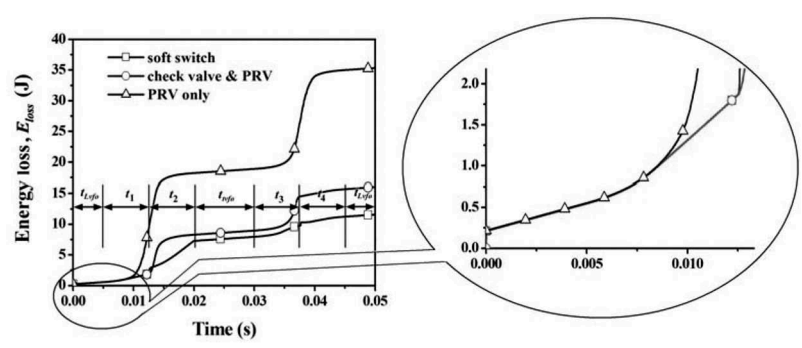

Figure 11. Comparison of the energy losses of the systems.

The energy loss per cycle while using the relief valves only is about 36 J which is considerably more than the losses that occur in other two configurations (using check valve and PRV, and using soft switch). The addition of the check valve across the load valve reduces the energy losses to about 16 J for one cycle. Further addition of the soft switch chamber eliminates the majority of the transition losses. The total energy loss in the system with soft switch is about 11.28 J, which is almost one-third of the system with relief valve only.

The inset picture in Figure 11 shows the characteristics of the energy loss before valve transition. It indicates that the base line energy loss is same for all the three systems which is about 0.25 J. This is because the full open pressure drop. The energy losses remain same in all the three systems under consideration till 0.0075 s; thereafter, the sharp increase in the energy losses occurs in the system with the relief valve only in comparison to the other two systems.

Figure 12 shows the variation in energy losses corresponding to the different values of lock stiffness. With the increase in the lock stiffness of the soft switch, the total energy losses of the system decrease. With the decrease in it, the more energy is lost toward the oscillation of the piston of the soft switch.

Simulation studies are also made with regard to the variation in the operating frequency of the load and the tank valves. In this respect, Figure 13 shows the power and energy losses for one PWM period for the 10, 20 and 30 Hz operating frequencies of the valves.

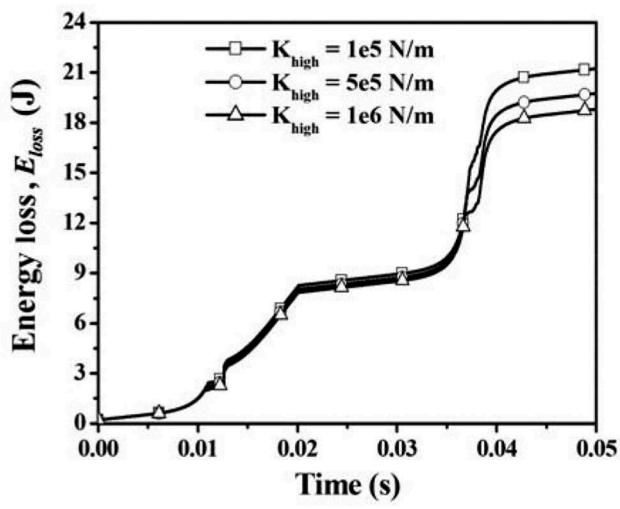

Figure 12. Comparison of the energy losses for different values of lock stiffness.

The transition times (t_1, t_2, t_3 and t_4) are accordingly scaled based on their values considered for 20 Hz (Figure 3). It is seen that with the increase in the PWM frequency, the total energy loss over one period decreases. As the PWM frequency is increased, there will be less time to fill chamber of the soft switch. The speed at which the chamber empties is a function of the spring force which compelled the stored fluid to flow through the tank valve. As the PWM frequency is increased, the less amount of fluid enters into the soft switch and therefore, with the same spring it will be able to empty the chamber more effectively.

5. Conclusions

This present study is based on the performance analysis of a soft switched on/off controlled hydraulic system through simulation. The detail modeling of the system has been made using bond graph technique. The soft switching is a concept which provides a momentary alternative flow path of the fluid during the valve transitioning, which reduces the associated throttle loss. Optimization of some key soft switch parameter values has been done using multiple-run simulation. Thereafter, a relationship between key parameters and desired output (overall energy loss) has been established through regression analysis. Further, the contact dynamics of the locking arrangement provided in the soft switch and the influence of locking spring stiffness on energy loss has been studied. The system response was also obtained with respect to the varying frequency of the PWM controlled valve. The following conclusions are derived from the model:

- The incorporation of the soft switch considerably reduces energy losses during the valve transitions of the on/off controlled hydraulic system.
- With the increase in the stiffness of the lock of the soft switch, the total energy loss of the system decreases. With the decrease in the stiffness of the lock, more energy is lost toward the oscillation of the soft switch piston.
- With the increase in the PWM frequency, the total power loss decreases. As the PWM frequency is increased, the less amount of fluid enters into the soft switch and therefore, with the same spring it will be able to empty the chamber more effectively.

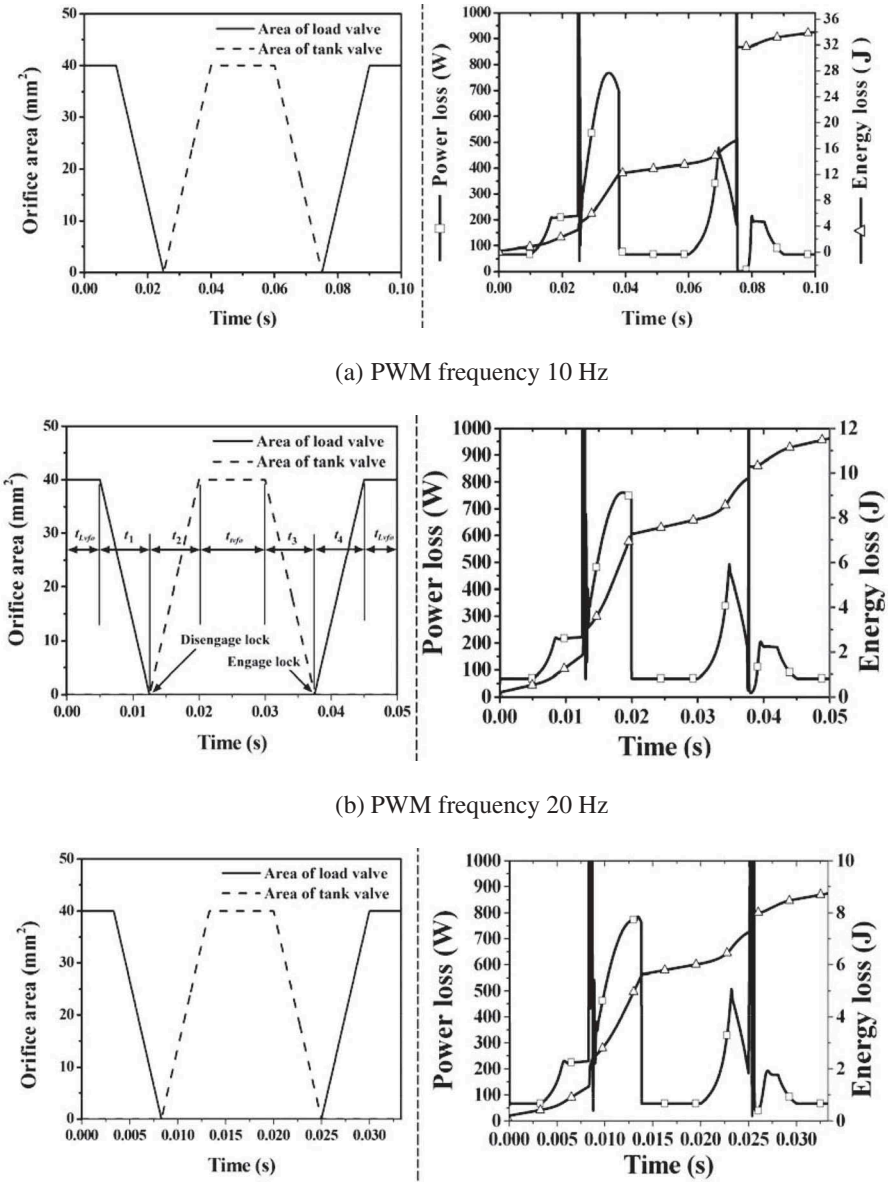

(a) PWM frequency 10 Hz

(b) PWM frequency 20 Hz

(c) PWM frequency 30 Hz

Figure 13. Power and energy losses for different PWM frequencies.

Notes on contributors

Anil C. Mahato is a senior research fellow in Mechanical Engineering Department of IIT (ISM), Dhanbad. He received B.Tech degree in 2009 from Haldia Institute of Technology under the University of WBUT, Kolkata. Thereafter, he received master (M.Tech) degree in CAD/CAM specialization from the NIT Jamshedpur in 2011. Furthermore, he served one industry as a design engineer till the year 2014. His current research interests are system modeling, simulation and control, condition monitoring, nonlinear oscillation and fluid power.

Sanjoy K. Ghoshal is an Associate Professor and in-charge of dynamics of machinery lab in Mechanical Engineering Department of IIT (ISM), Dhanbad. He received B.E. degree in 1996 from Jadavpur University (JU), Kolkata and then served three different industries as maintenance engineer till the year 2001. Thereafter, he received master degree in machine design specialization from the same University (JU) in 2003 and PhD degree from IIT – Kharagpur in 2007. He has authored many journal articles and one book chapter. His current research interests are system modeling, simulation and control, fault diagnosis, automation, condition monitoring, nonlinear oscillation and fluid power.

Arun K. Samantaray is a full Professor and in-charge of system, dynamics and control lab in Mechanical Engineering Department of IIT – Kharagpur. He received B.Tech degree in 1989 from CET Bhubaneswar, and M.Tech degree in machine dynamics and PhD from IIT – Kharagpur in the years 1991 and 1996, respectively. He worked as a project manager for Hi-Tech consultants from 1996 to 2001 and as a CNRS researcher at University des Sciences et Technologies de Lille, France, from 2001 to 2004. He has authored three books and many journal articles. He is also a consultant to various industries. His research interests are systems and control, fault diagnosis, automation, non-linear mechanics, walking robots, rotor dynamics and vehicle dynamics.

ORCID

Anil C. Mahato http://orcid.org/0000-0002-3025-1551
Sanjoy K. Ghoshal http://orcid.org/0000-0001-6477-3174

References

[1] Karz A Design of a high speed hydraulic on/off valve. Thesis (MS). Worcester Polytechnic Institute. Germany: 2008.
[2] Zhu K, Gu L, Chen Y, et al. High speed on/off valve control hydraulic propeller. Chin J Mechanical Eng. 2012;25(3):463–473.
[3] Wang F, Gu L, Chen Y. A continuously variable hydraulic pressure converter based on high-speed on–off valves. Mechatronics. 2011;21(8):1298–1308.
[4] Tu HC, Rannow MB, Wang M, et al. Design, modeling, and validation of a high-speed rotary pulse-width-modulation on/off hydraulic valve. J Dyn Syst Meas Control. 2012;134(6):061002.
[5] Tomlinson SP, Burrows CR. Achieving a variable flow supply by controlled unloading of a fixed displacement pump. J Dyn Syst Meas Control. 1992;114(1):166–171.
[6] Li PY, Li CY, Chase TR Software enabled variable displacement pump. Proceeding of ASME conference on International Mechanical Engineering Congress and Exposition; Orlando; FL; 2005;63–72;IMECE2005-81376.
[7] Rannow MB, Tu HC, Perry Y. et al. Software enabled variable displacement pumps-experimental studies. Proceeding of ASME conference on International Mechanical Engineering Congress and Exposition; Chicago; IL; 2006; 67–76;IMECE2006-14973.
[8] Tu HC, Rannow MB, Van De Ven JD, et al. High speed rotary pulse width modulation on/off valve. Proceeding of ASME conference on International Mechanical Engineering Congress and Exposition; Seattle; WA; 2007;89–102;IMECE2007-42559.
[9] Rannow MB, Perry Y. Soft switching approach to reducing transition losses in an on/off hydraulic valve. J Dyn Syst Meas Control. 2012;134(6):064501.
[10] Mukherjee A, Karmakar R, Samantaray AK. Bond graph in modeling, simulation and fault identification. FL: CRC Press; 2006.
[11] Samantaray AK, Ould Bouamama B. Model-based Process Supervision. London: Springer; 2008.
[12] Thoma J, Ould Bouamama B. Modelling and simulation in thermal and chemical engineering. Berlin: Springer-Verlag; 2000.
[13] Merzouki R, Samantaray AK, Pathak PM. Intelligent mechatronic systems: modeling, control and diagnosis. London: Springer-Verlag; 2012.
[14] Borutzky W. Bond graph modelling of engineering systems: theory, applications and software support. New York: Springer-Verlag; 2011.
[15] Singh A, Bera TK. Bond graph aided thermal modelling of twin-tube shock absorber. Int J Modelling Simulation. 2016;36(4):183–192.
[16] Nakhaeinejad M, Lee S, Bryant MD Finite element bond graph model of rotors. Proceedings of Spring Simulation Multi conference. Society for Computer Simulation International. 2010;213.
[17] Nakhaeinejad M, Bryant MD. Dynamic modeling of rolling element bearings with surface contact defects using bond graphs. J Tribol. 2011;133(1):011102.
[18] Abraham A, Pappa N, Shanmugha Priya M, et al. Predictive control design for a MIMO multivariable process using order reduction techniques. Int J Modelling Simulation. 2017;37(4):199–207.
[19] Hote YV, Jha AN. New approach of Gerschgorin theorem in model order reduction. Int J Modelling Simulation. 2015;35(3–4):143–149.
[20] Liu R, Xie X, Yu K, et al. A survey on simulation optimization for the manufacturing system operation. Int J Modelling Simulation. 2017;38(2):116–127.
[21] Samantaray AK, Mukherjee A. Users Manual of SYMBOLS Shakti. High-Tech Consultants. Kharagpur: Indian Institute of Technology; 2006.
[22] Zhan W, Cui Y, Feng Z, et al. Joint optimization approach to building vibration control via multiple active tuned mass dampers. Mechatronics. 2013;23(3):355–368.
[23] Qian W, Wang B, Feng Z. Adaptive central force optimization algorithm based on the stability analysis. Math Probl Eng. 2015;(2015). Article ID 914789.
[24] Yu J, Chen Z, Lu Y. The variation of oil effective bulk modulus with pressure in hydraulic systems. J Dynamic Syst Meas Control. 1994;116(1):146–150.